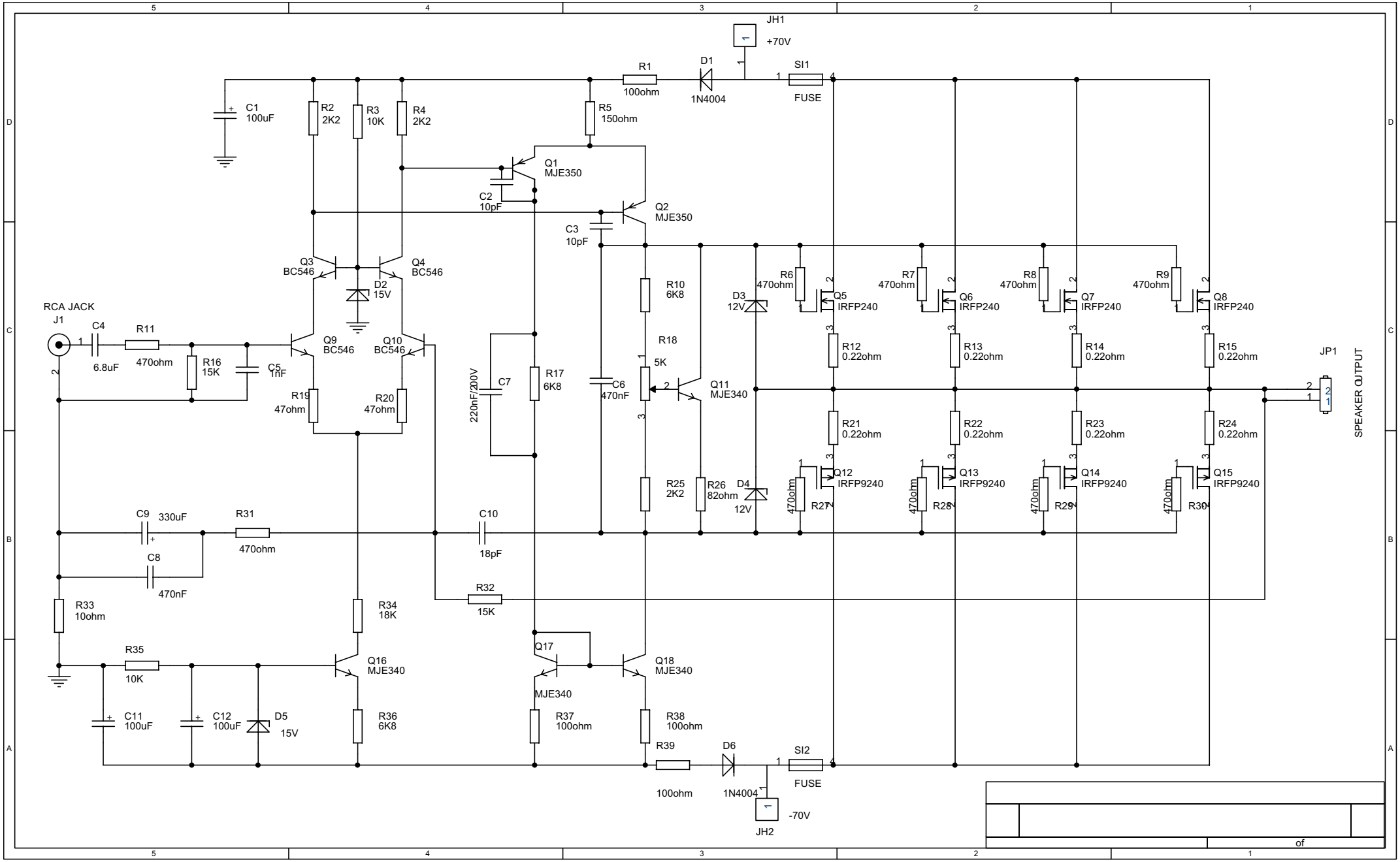
JH1
+70V
R1
100ohm
D1
1N4004
SI1
FUSE
C1
100uF
R2
2K2
R3
10K
R4
2K2
R5
150ohm
Q1
MJE350
C2
10pF
Q2
MJE350
C3
10pF
Q3
BC546
Q4
BC546
D2
15V
RCA JACK
J1
C4
6.8uF
R11
470ohm
R16
15K
C5
1nF
Q9
BC546
Q10
BC546
R19
47ohm
R20
47ohm
220nF/200V
C7
R17
6K8
C6
470nF
R10
6K8
R18
5K
Q11
MJE340
D3
12V
D4
12V
R25
2K2
R26
82ohm
R6
470ohm
R7
470ohm
R8
470ohm
R9
470ohm
Q5
IRFP240
Q6
IRFP240
Q7
IRFP240
Q8
IRFP240
R12
0.22ohm
R13
0.22ohm
R14
0.22ohm
R15
0.22ohm
R21
0.22ohm
R22
0.22ohm
R23
0.22ohm
R24
0.22ohm
Q12
IRFP9240
Q13
IRFP9240
Q14
IRFP9240
Q15
IRFP9240
470ohm
R27
R28
R29
R30
JP1
SPEAKER OUTPUT
C9
330uF
R31
470ohm
C8
470nF
C10
18pF
R32
15K
R33
10ohm
R34
18K
R35
10K
Q16
MJE340
Q17
MJE340
Q18
MJE340
C11
100uF
C12
100uF
D5
15V
R36
6K8
R37
100ohm
R38
100ohm
R39
100ohm
D6
1N4004
SI2
FUSE
-70V
JH2
of

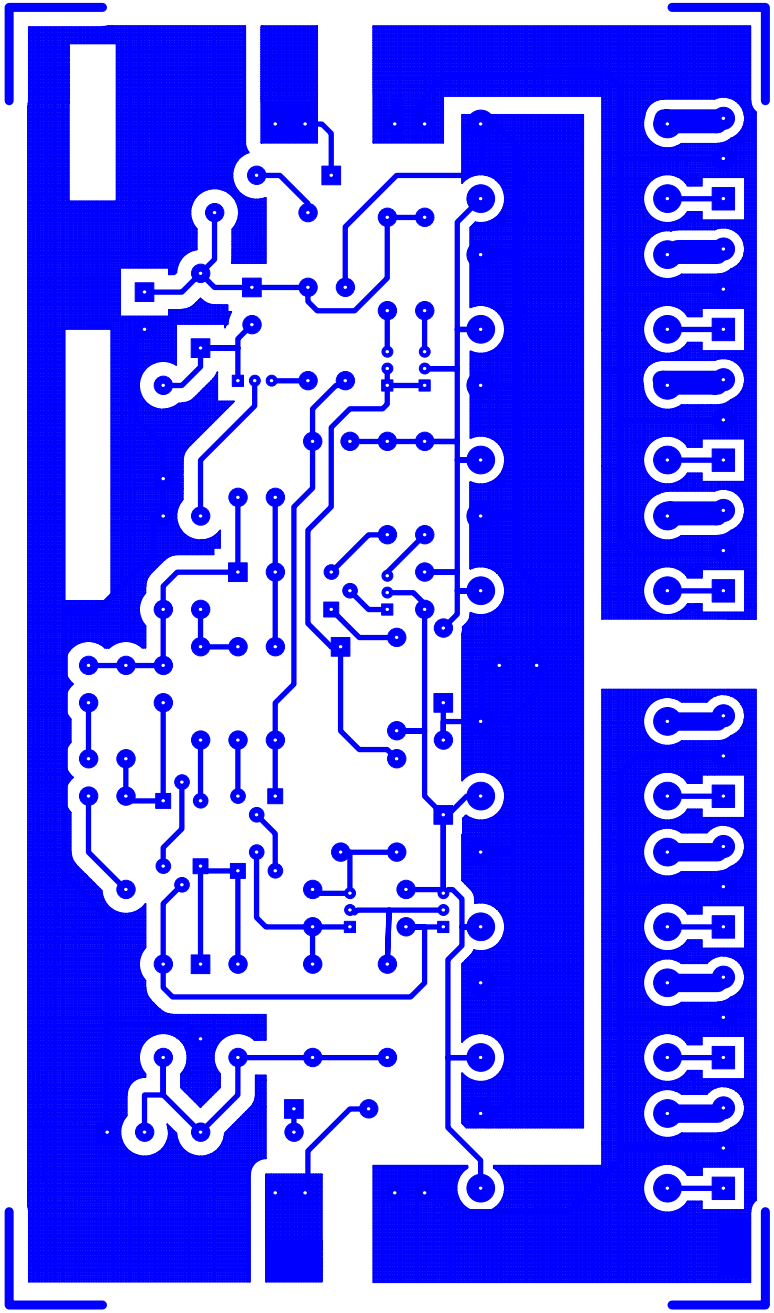

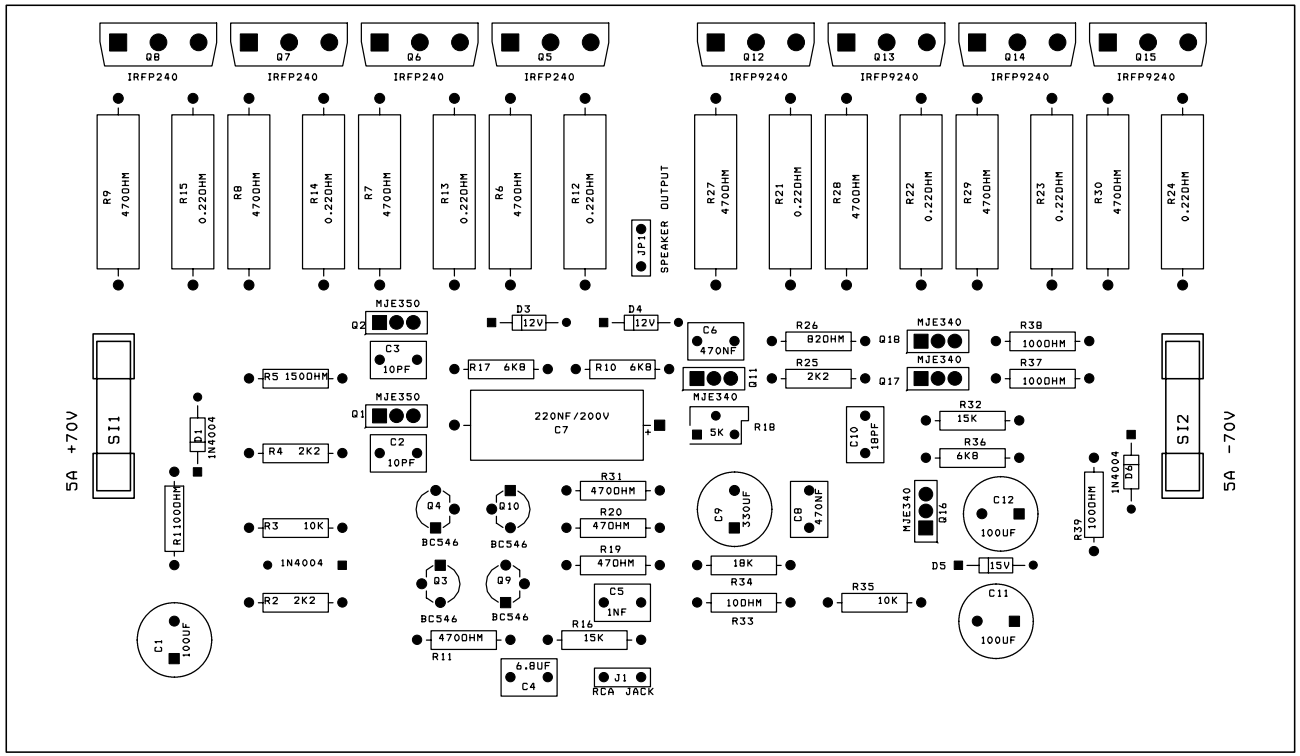
Q8
IRFP240
Q7
IRFP240
Q6
IRFP240
Q5
IRFP240
Q12
IRFP9240
Q13
IRFP9240
Q14
IRFP9240
Q15
IRFP9240
R9 470OHM
R15 0.22OHM
R8 470OHM
R14 0.22OHM
R7 470OHM
R13 0.22OHM
R6 470OHM
R12 0.22OHM
JP1
SPEAKER OUTPUT
R27 470OHM
R21 0.22OHM
R28 470OHM
R22 0.22OHM
R29 470OHM
R23 0.22OHM
R30 470OHM
R24 0.22OHM
MJE350
Q2
C3 10PF
R5 150OHM
MJE350
Q1
C2 10PF
R4 2K2
R3 10K
1N4004
R2 2K2
R1100OHM
D1 1N4004
C1 100UF
5A +70V
SI1
D3 12V
D4 12V
R17 6K8
R10 6K8
220NF/200V
C7
Q4
BC546
Q10
BC546
Q3
BC546
Q9
BC546
R11 470OHM
6.8UF
C4
R31 470OHM
R20 470OHM
R19 470OHM
C5 1NF
R16 15K
J1
RCA JACK
C6 470NF
MJE340
Q11
5K
R18
C9 330UF
18K
R34
100OHM
R33
C8 470NF
R26 82OHM
R25 2K2
Q18
Q17
MJE340
MJE340
C10 18PF
MJE340
Q16
R35 10K
R38 100OHM
R37 100OHM
R32 15K
R36 6K8
C12 100UF
D5 15V
C11 100UF
R39 100OHM
1N4004
D2
SI2
5A -70V